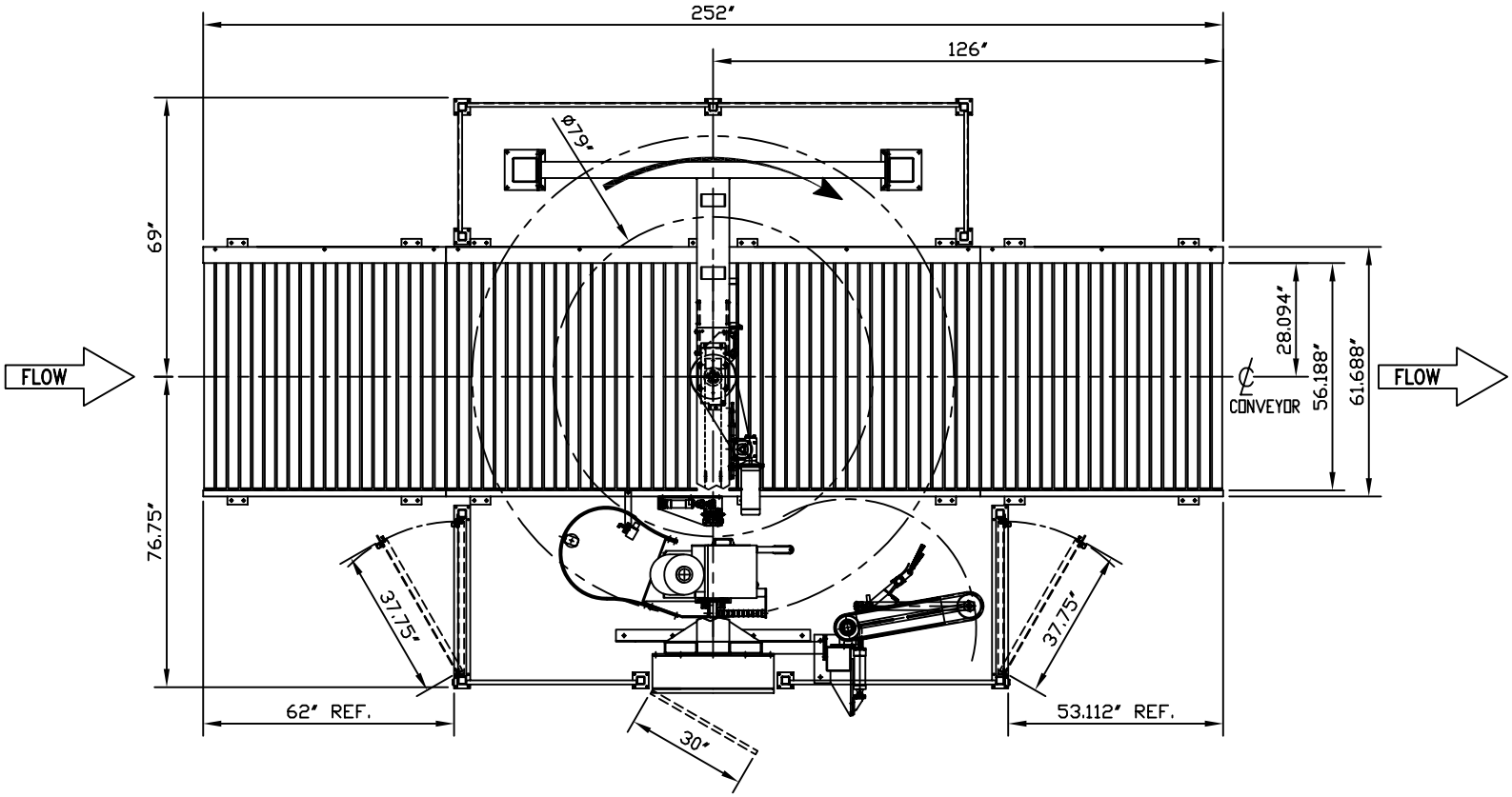

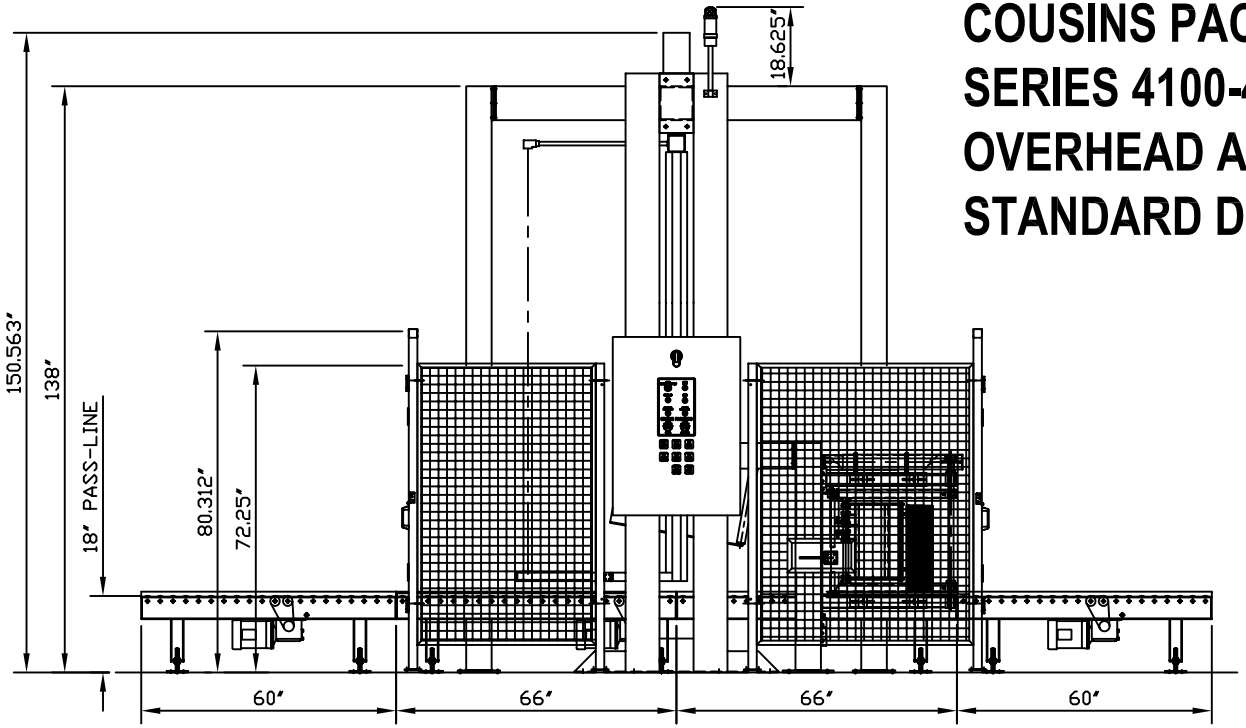

COUSINS PACKAGING INC.
SERIES 4100-45-OHA TITAN
OVERHEAD AUTOMATIC
STANDARD DIMENSIONS